Instructions for a Two LED , (Green/Red) HO Bachmann Signal System

Project 12b *www.modeltrtainsounds.com*

This project uses 2 LEDs to replace the 2 fake lenses on a non operational Bachmann(TM) Block Signal to create an operational signal. The 2 LEDs are set up by soldering their leads reversed so that a third common wire is not required. It can be manually operated using the same electrical circuit as described for the single bicolor signal system using a double pole double throw switch and it can also operate with an occupancy detection system. The project components are available in a kit at the website listed above.

THE SIGNAL with a GREEN and RED LED replaced in the target, are connected to two wires threaded down the stem between the ladder and out of the base. The wires can be directed to under the layout .

THE POWER UNIT; Consists of a 9 Volt Battery Holder, a 20 milli-amp driver chip, a double pole double throw switch (DPDT), two connection wires with Male and Female Dupont connection plugs plus some heat shrink tubing for covering solder connections. Two signals can be operated simultaneously on the one power supply and switch.

NOTE: a higher voltage source, such as 12V, can be also be used and no resistors are needed with this circuit due to the use of the LED Driver chip

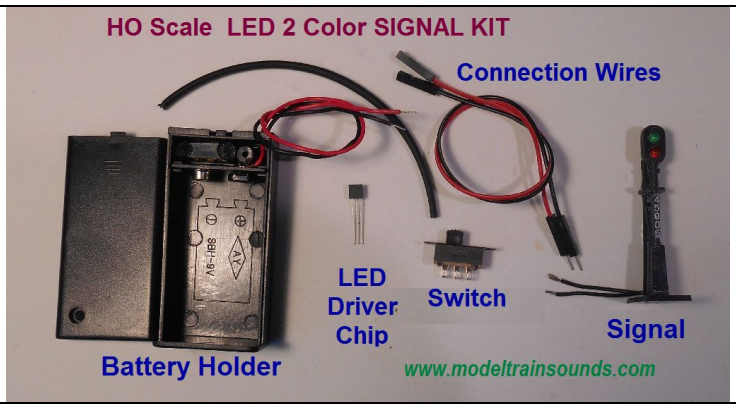

Kit Components

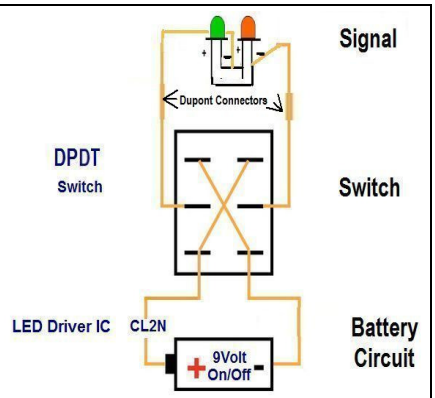

Wiring Circuit schematic

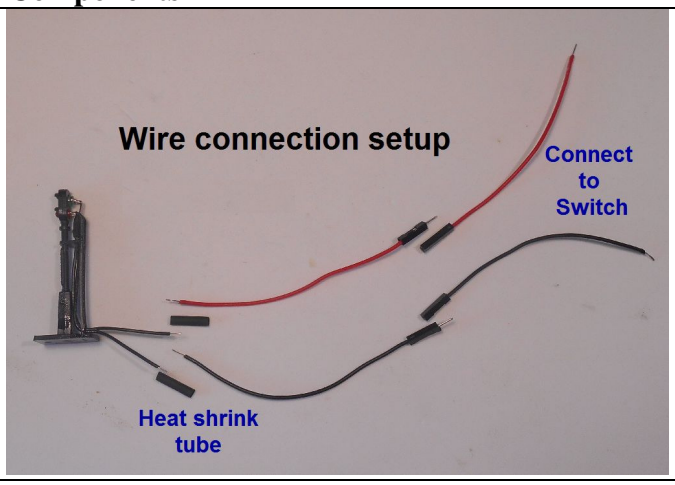

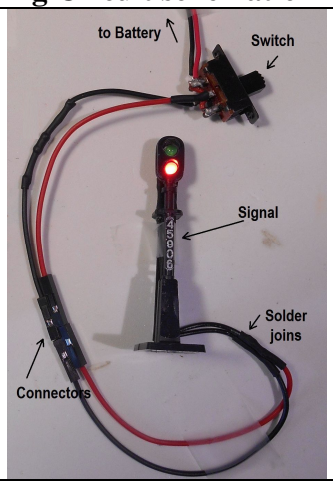

Assembly: Attach the connection wires by cutting the wire in the middle and soldering the free ends of the wires with the male plugs to the signal wires. Cover joints with heat shrink tube before soldering and shrink over the joint.

The female connecting wires connect to the switch via inter-connection wires (not shown) back to the switch pins.

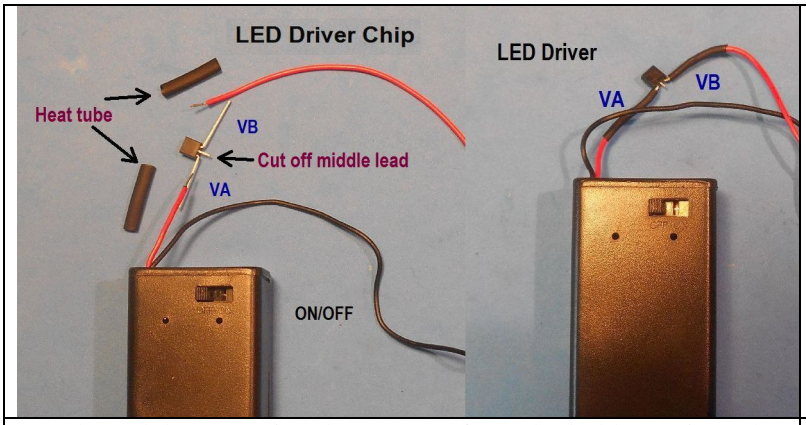

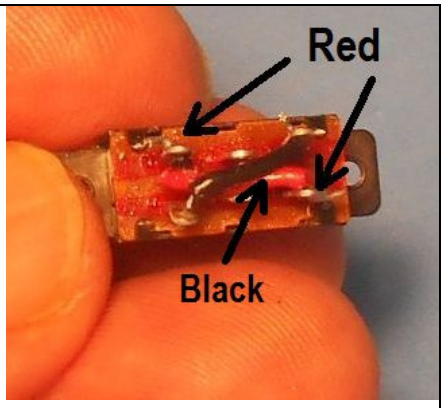

Cut the red battery wire about 1 1/2" from the holder, strip and tin the ends. Use heat shrink tube to cover the solder joints. Bend out the leads of the LED Driver chip out with flat side facing you. The lead on the left is the VA lead and on the right VB. Snip off the middle lead. Solder the 2 leads to the red wires as shown covering the joints with shrink the tubing. Shrink with a heat gun or hair dryer set on high. Finished setup is on the right.

Cut off around 1" from the ends of the red and black wires. Strip and tin both ends . Now solder these red & black wires across to the end pins.

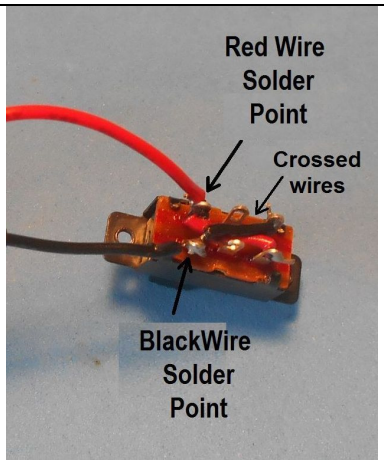

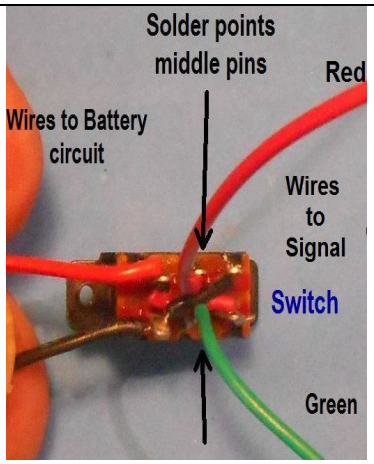

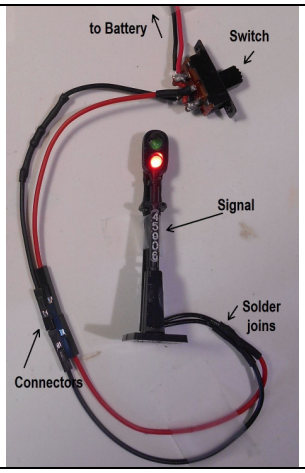

Solder the battery wires to the 2 pins at one end pole of the switch. The switch can be located anywhere on the layout but will require inter-connecting wires. Use 28 gauge wires for this purpose.

Solder the interconnecting wires to the center pins. These wires will vary in length depending on where the power unit and switch are to be located. These wires are not included in the Kit.

The interconnection wires are soldered to the wires with the female connection wires. Here the wires are directly connected to the switch .

Operation Stopped Loco. Green -: Loco Moves Red as train enters block